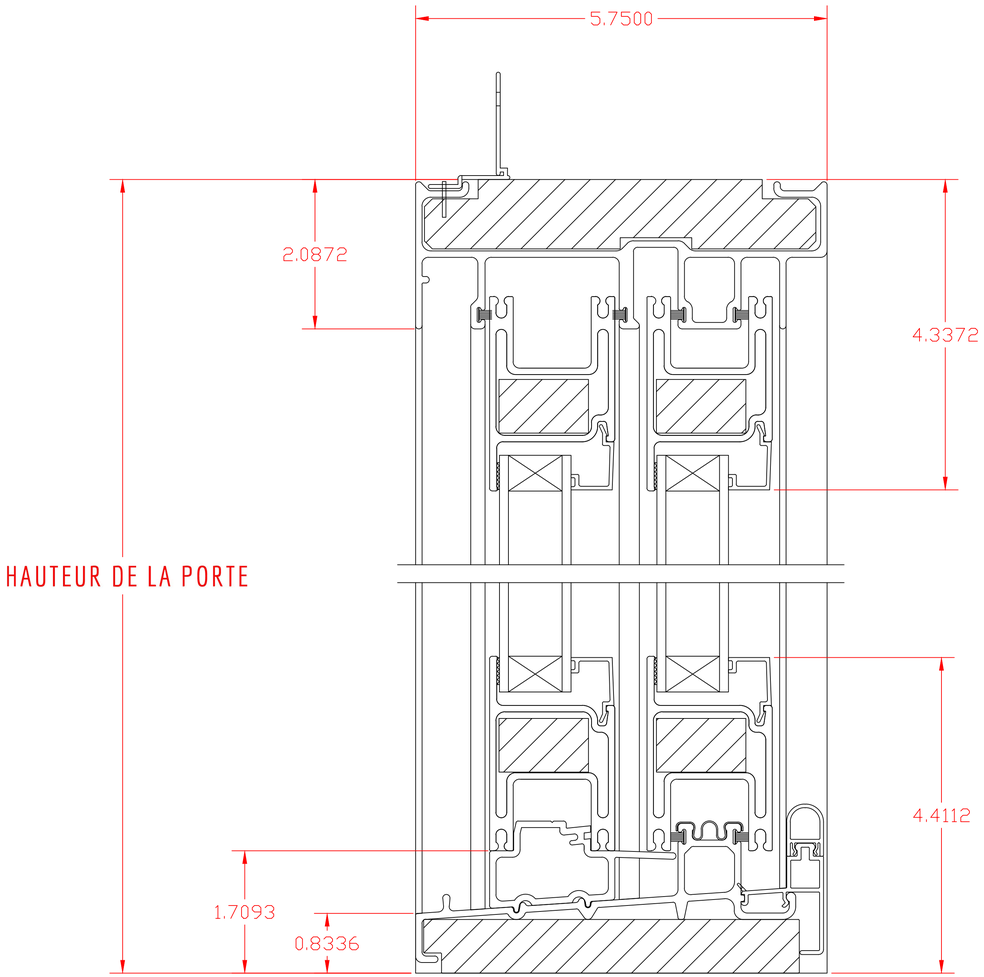

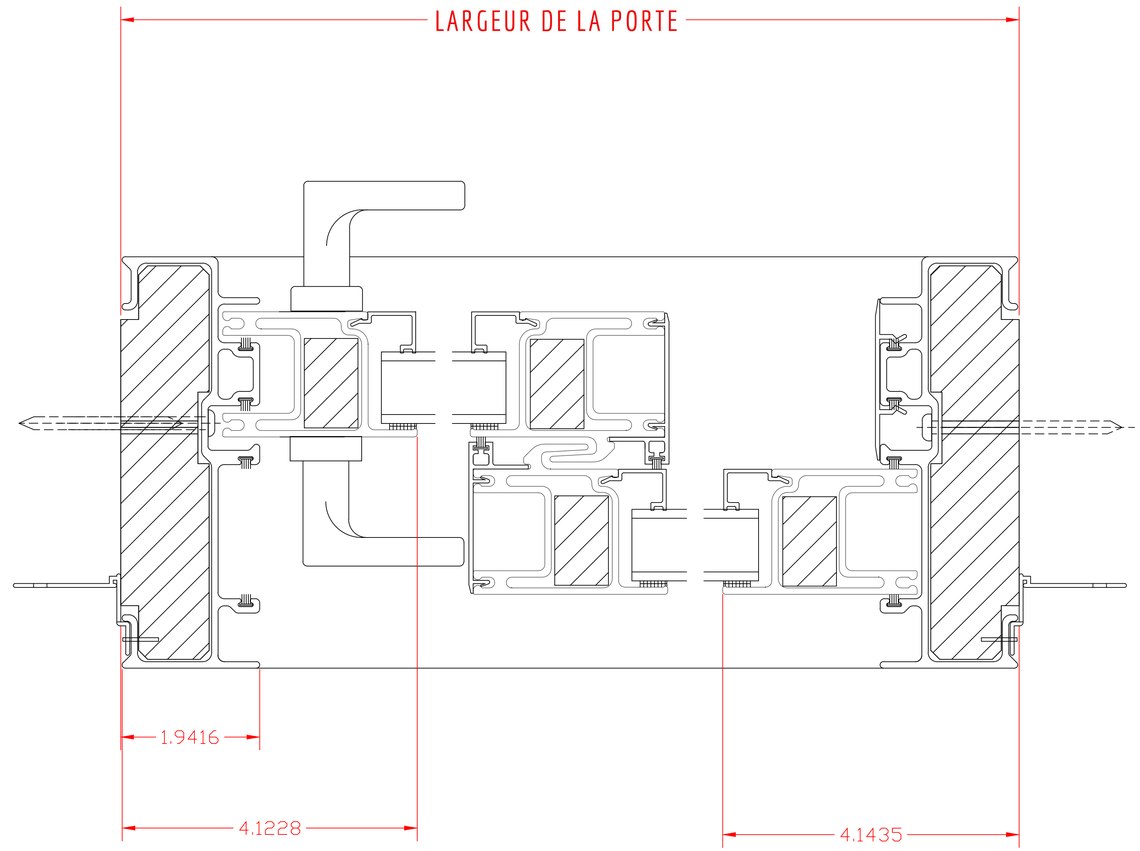

COMFORT LINE LTD.
5500 ENTERPRISE BLVD.
TOLEDO, OH 43612
419-729-8520

THIS DRAWING IS THE PROPERTY OF COMFORT LINE LTD.
DESIGN CONCEPTS AND INFORMATION MAY NOT BE
REPRODUCED USED OR DISCLOSED WITHOUT THE WRITTEN
PERMISSION OF COMFORT LINE LTD.

SCALE: FULL	PROJECT:	5000 SLIDING DOOR CROSS SECTIONS	
DATE: 7/15/13	QUOTE:		SHEET:
DRAWN BY: AJL			